SinglePointLoadCells | SPL-SSW-103

IP68 stainless single point bench cell | Electrical and selection reference

Material	Stainless steel; grade not specified
Protection	IP68
Accuracy declaration	C3 in source catalogue; exact certificate scope to confirm
Input resistance	390 +/-5 ohm
Output resistance	350 +/-5 ohm
Catalogue cable	6 mm diameter x 1500 mm; 6 conductors plus shield
Recommended excitation	5 V
Maximum excitation	12 V
Compensated temperature	-10 to +40 deg C
Operating temperature	-10 to +50 deg C
Static safe overload	150% F.S.; not an impact-survival rating
Ultimate overload	200% F.S.; not a permitted operating load
vmin / full-scale deflection	Not specified in the source table; request order-specific values
Platform envelope	500 x 400 mm

Wiring reference: EXC+ Green; EXC- Black; SIG+ White; SIG- Red; SEN+ Yellow; SEN- Blue; Shield Shield. Confirm the supplied cable function chart before energizing.

Data basis: 2023 supplier catalogue, transcribed and reviewed for this independent SPL reference. These are selection values, not a released production drawing, SPL calibration report or transferred manufacturer approval. Confirm tare, eccentric loading, the drawing revision and all certificate conditions before ordering.

SinglePointLoadCells | SPL-SSW-103

Mounting reference in mm | Capacity-specific envelope and output

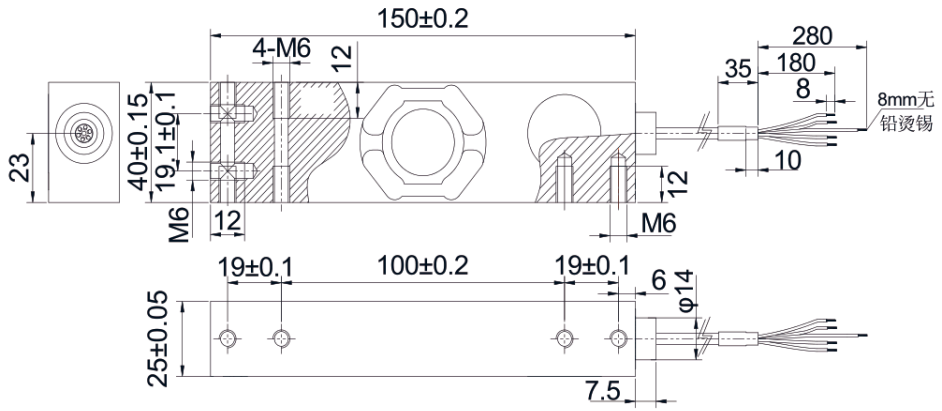

Capacity kg	L x W x H mm	Thread / depth	Output
6	150 x 25 x 40	M6 / 12 mm	2.0 +/-10% mV/V
10	150 x 25 x 40	M6 / 12 mm	2.0 +/-10% mV/V
20	150 x 25 x 40	M6 / 12 mm	2.0 +/-10% mV/V
30	150 x 25 x 40	M6 / 12 mm	2.0 +/-10% mV/V
50	150 x 25 x 40	M6 / 12 mm	2.0 +/-10% mV/V
100	150 x 25 x 40	M6 / 12 mm	2.0 +/-10% mV/V

IP68 declaration does not establish hot high-pressure cleaning, chemical compatibility or hygienic approval. Stainless alloy grade and sealing process are not specified.
Reference platform: 500 x 400 mm; include platter/fixture tare in the rated gross load and confirm corner-load acceptance.
M6 depth callouts are 12 mm; confirm actual bolt engagement, spacer stack and torque on the supplied drawing. No torque or thread pitch is inferred.
Static safe overload 150% F.S.; ultimate 200% F.S. is not an operating or impact-survival rating. Deflection and vmin are not published.
Cable-entry boss: diameter 14 mm, projection 7.5 mm beyond body. Confirm active mounting faces/engagement; do not assume all depicted mounting faces are used together.
The source wire-tail note denotes 8 mm lead-free tinned ends, not a whole-assembly compliance statement. Confirm the supplied cable termination.